SA055 x 2

SA056 x 2

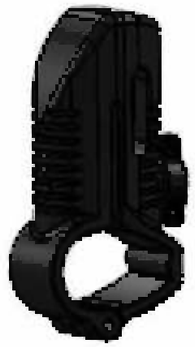

SA070 x 4

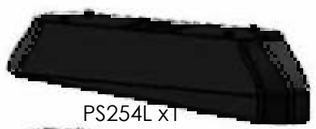

PS254L x1

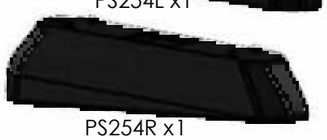

PS254R x1

PS178 x 2

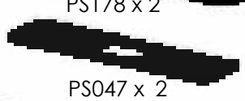

PS047 x 2

PS412 x 2

(1:1)

FS105 (M8 x 55) x 2

FS061 (M8 x 35) x 2

FW009 (M8) x 4

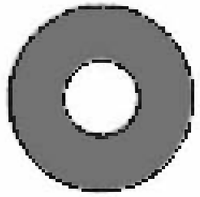

FW002 (M8) x 4

FT01 x 1

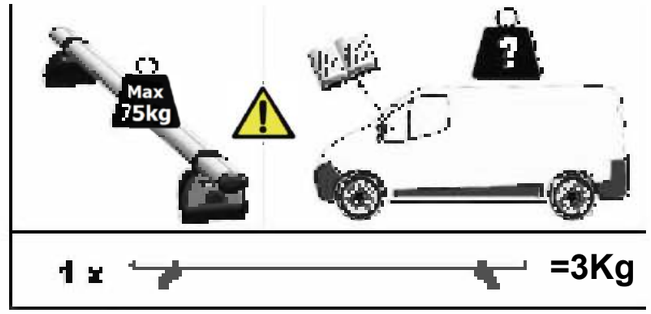

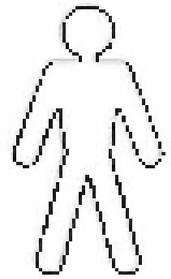

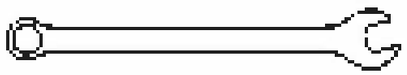

13mm x 1

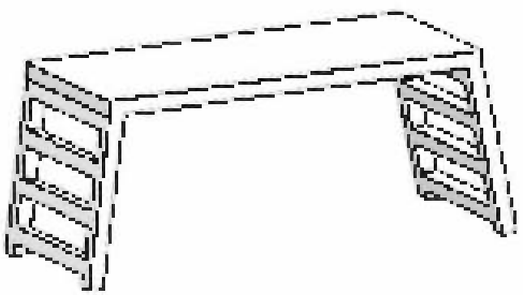

1.

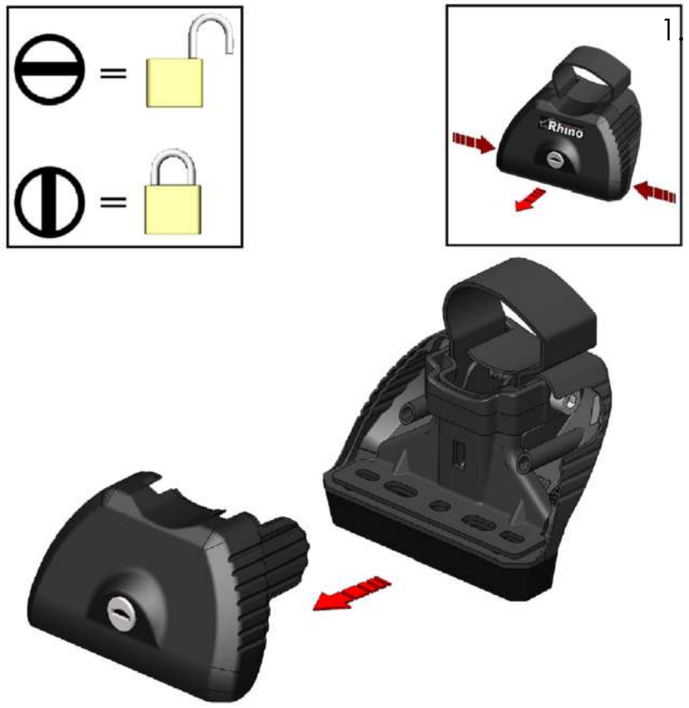
=
=
Rhino

2.

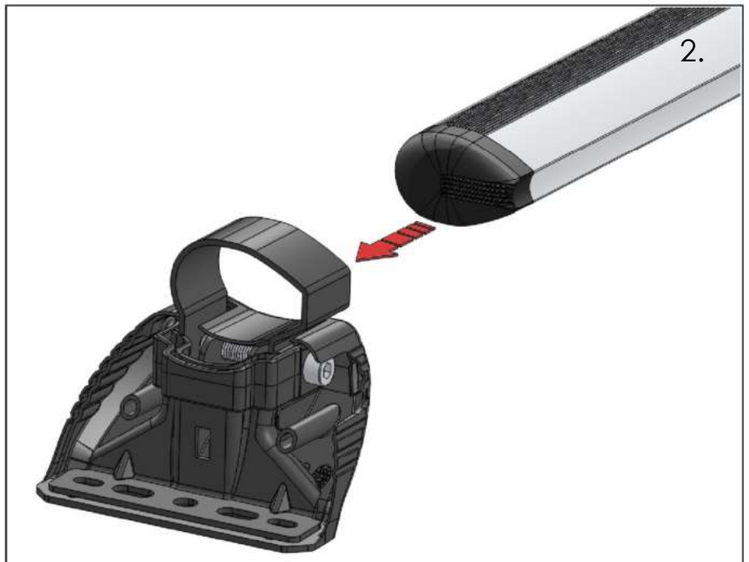

3.

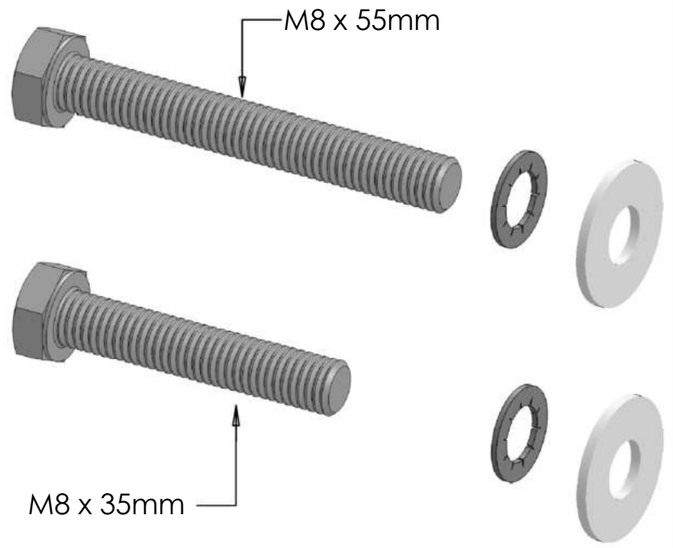
M8 x 55mm
M8 x 35mm

4.

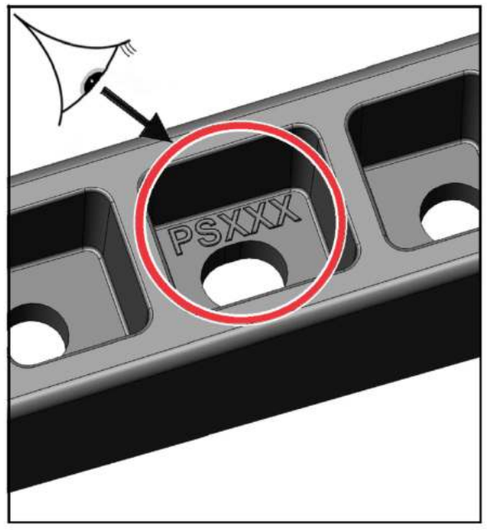
PSXXX

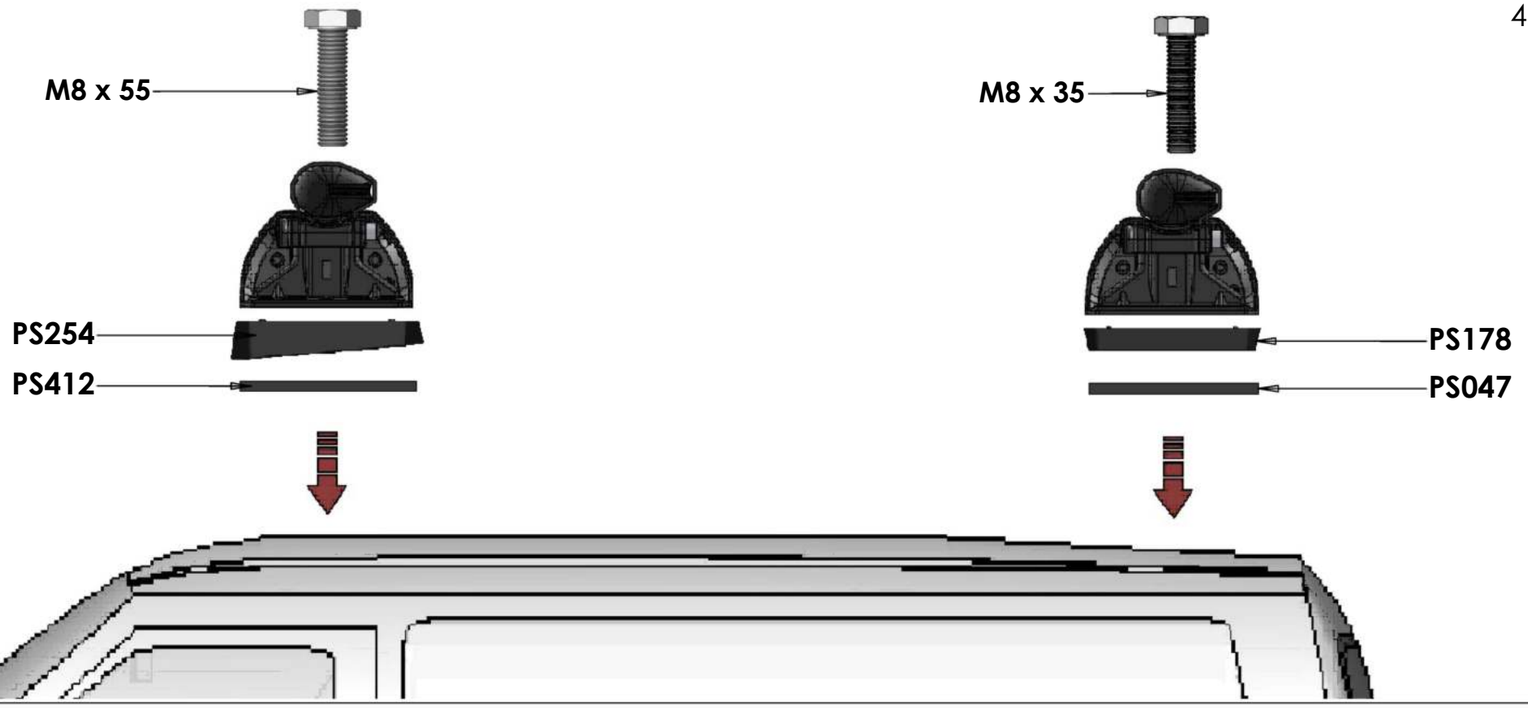
M8 x 55
PS254
PS412
M8 x 35
PS178
PS047

5.

6.

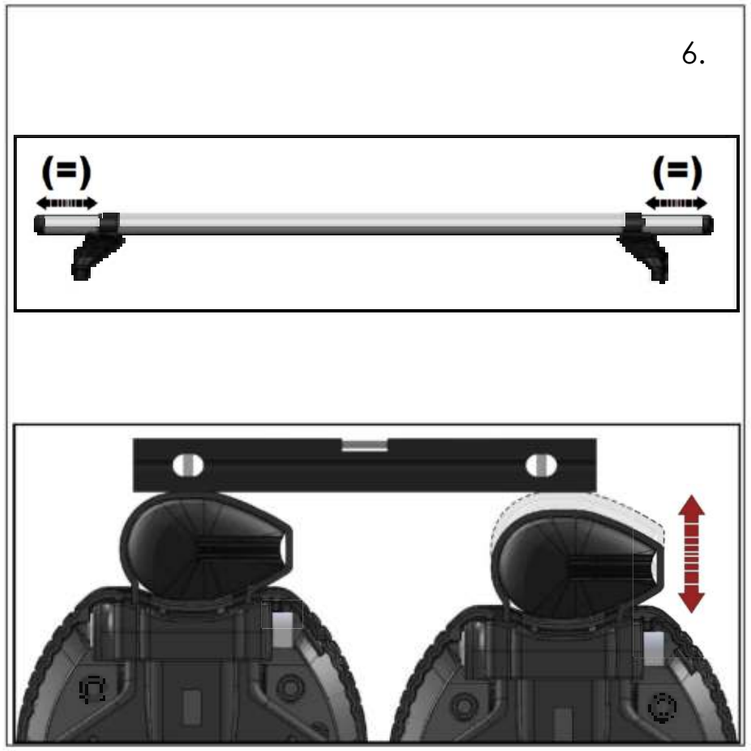

7.

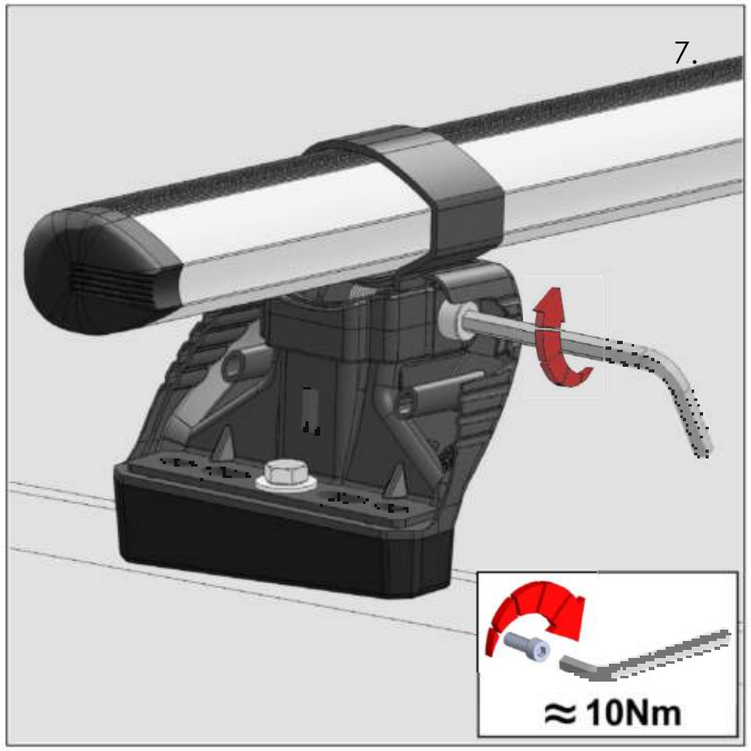

8.

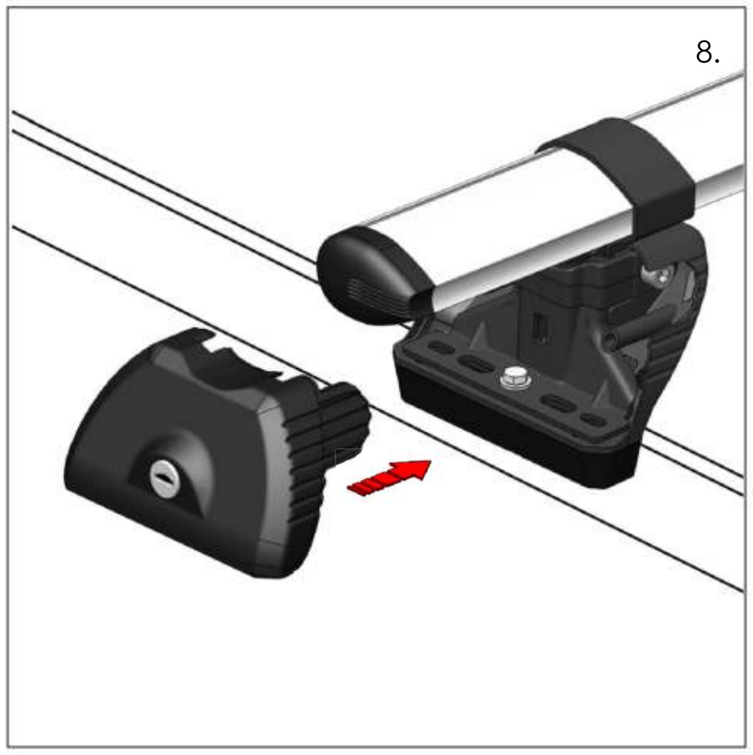

9.

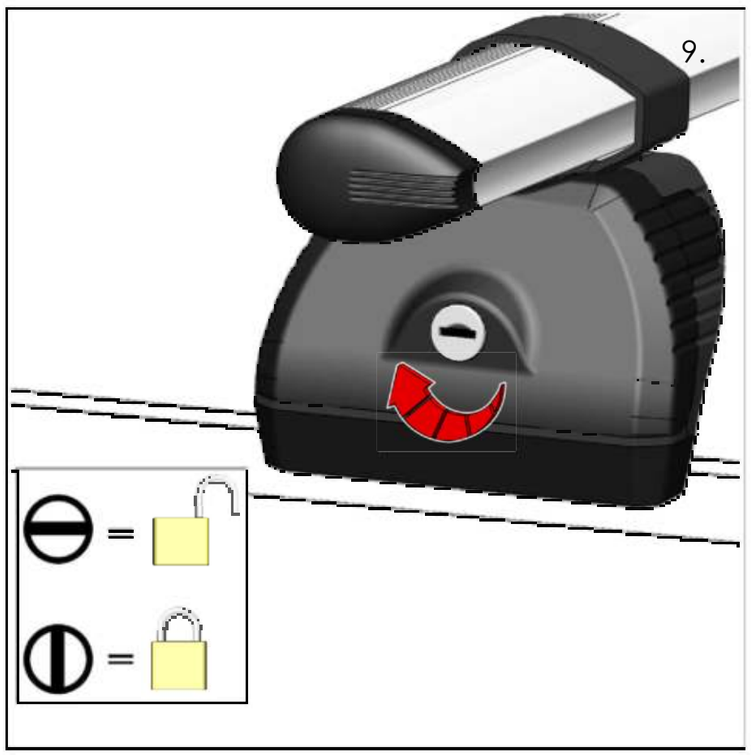

10.

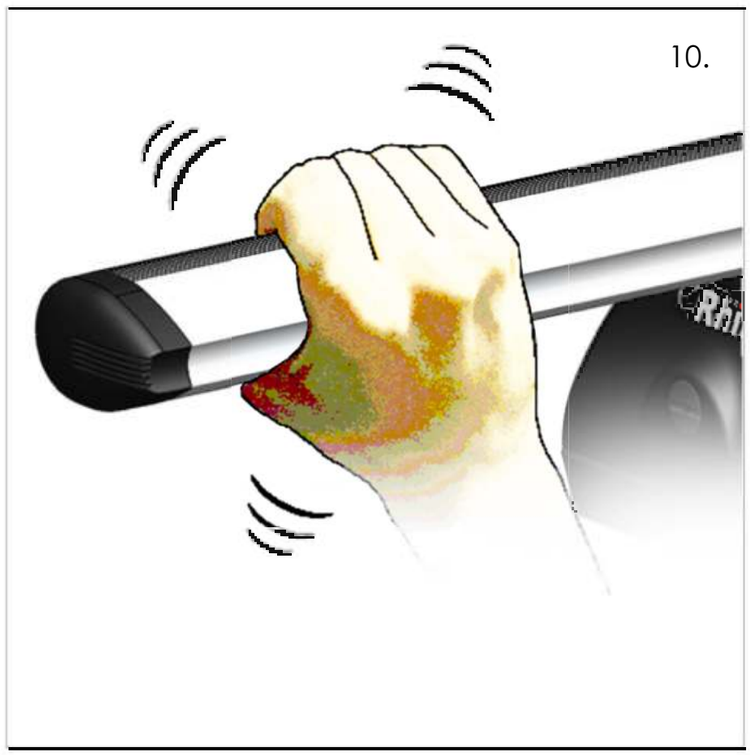

11.

12.

13.

14.

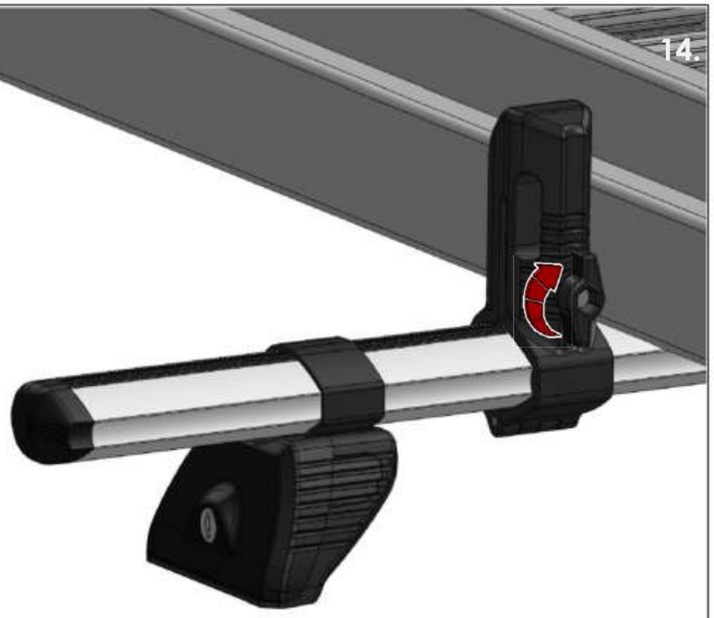

15.